Number	Date	Modification	E	Owner
500000730074	09/04/2024	ADD. 3D. REVISTO COTAS CONF. FORNECEDOR.	1	MARCELDC

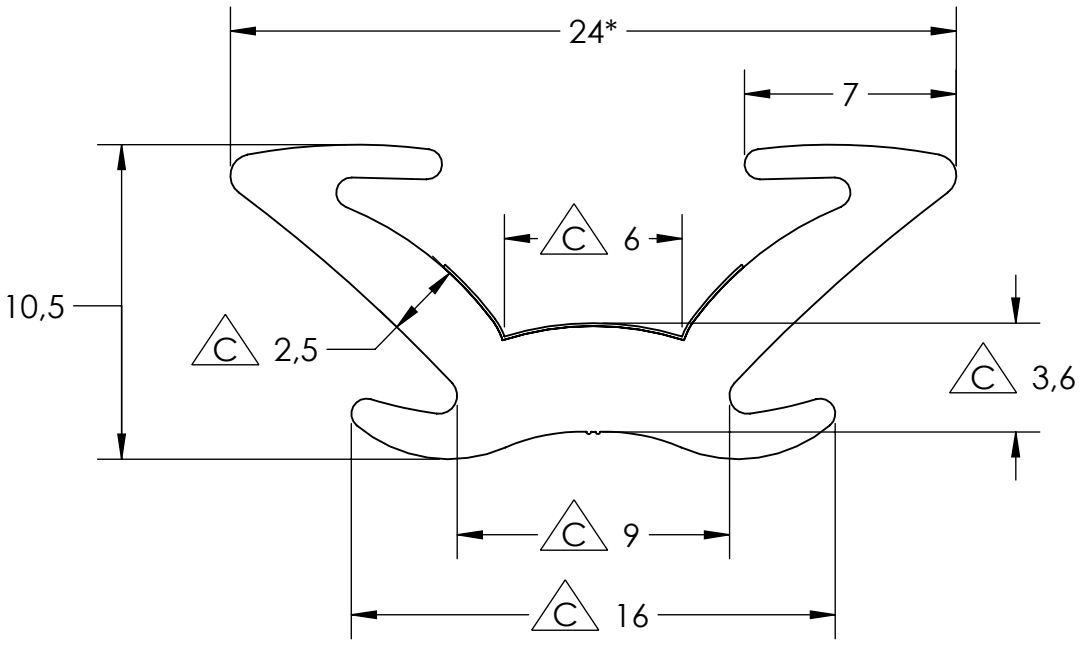

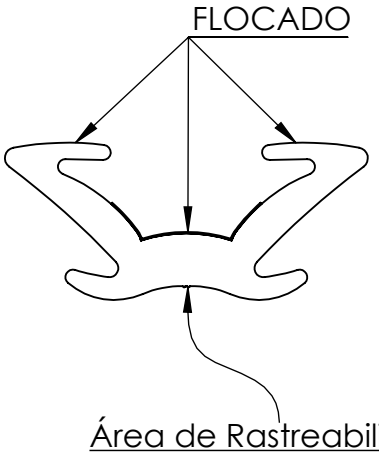

* Pode haver variação de acordo com a acomodação do rolo

MATERIAL: BORRACHA
MATERIAL
MATERIAL

NORMA: ASTM_D2000
NORM
NORMA

E M E: BOR_129_91
ENG. MATER. SPECIFICATION
ESPECIFICACION MATERIAL INGENI

COMPRIMENTO: 50000,000
LENGTH
LONGITUD

ALTURA: 10,500
HEIGHT
ALTURA

LARGURA: 24,000
WIDTH
ANCHURA

FATOR DE CALCULO: 1,000
FACTOR FOR CALCULATION
FACTOR DE CALCULO

COR: PRETO
COLOR
COLOR.

UNIDADE DO FATOR DE CALCULO: M
UNIT OF FACTOR FOR CALCULATION
UNIDAD DEL FACTOR DE CALCULO

DUREZA : 70_SHORE_A
HARDNESS
DUREZA

TIPO BORRACHA: EPDM
RUBBER TYPE:
TIPO GOMA:

C CARACTERISTICA DE CONTROLE
CONTROL CHARACTERISTIC

Tolerâncias quando não especificadas são conforme DIN ISO 3302-1
Unless not otherwise specified, tolerances will be in accordance with DIN ISO 3302-1

Dimensões Longitudinais / Longitudinal Dims	<40 ±1,0	40-63 ±1,3	63-100 ±1,6	100-160 ±2,0	160-250 ±2,5	250-400 ±3,2	400-630 ±4,0	630-1000 ±5,0	1000-1600 ±6,3	1600-2500 ±10,0	2500-4000 ±12,5	>4000 ±0,32%
Dimensões Transversais / Transversal Dims	<1,5 ±0,25	1,5-2,5 ±0,35	2,5-4,0 ±0,40	4,0-6,3 ±0,50	6,3-10,0 ±0,70	10,0-16,0 ±0,80	16,0-25,0 ±1,00	25,0-40,0 ±1,30	40,0-63,3 ±1,60	63,3-100,0 ±2,00	>100 ±2,00%	

Marcopolo

Scale: 4:1	Date: 09/04/2024
View System:	Liquid weight(Kg): 0,096
Origin: 98130311	
Version: AD	

Denomination:

PERFIS DE BORRACHA MACICA

SOLID RUBBER PROFILES

PERFILES DE CAUCHO MACIZO

Project Office: ENO_MP10

Reviser by SAP WorkFlow: VIEW IN PLM SYSTEM

Drawer: MARCELDC

Use:

Code: 98130707

Class: 981301